THIS DRAWING IS UNPUBLISHED. RELEASED FOR PUBLICATION -,- .
© COPYRIGHT - BY TYCO ELECTRONICS CORPORATION. ALL RIGHTS RESERVED.

LOC	DIST
GP	00

REVISIONS

P	LTR	DESCRIPTION	DATE	DWN	APVD
	O	RELEASED PER EC 0S13-0440-04	12-07-04	GA	JG

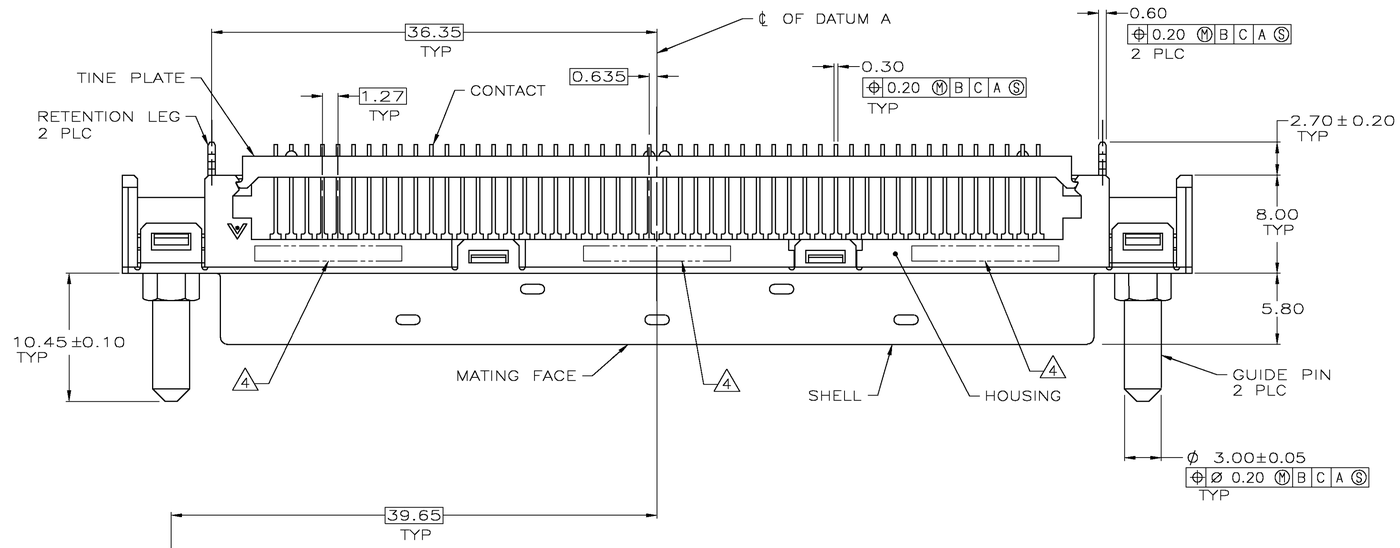

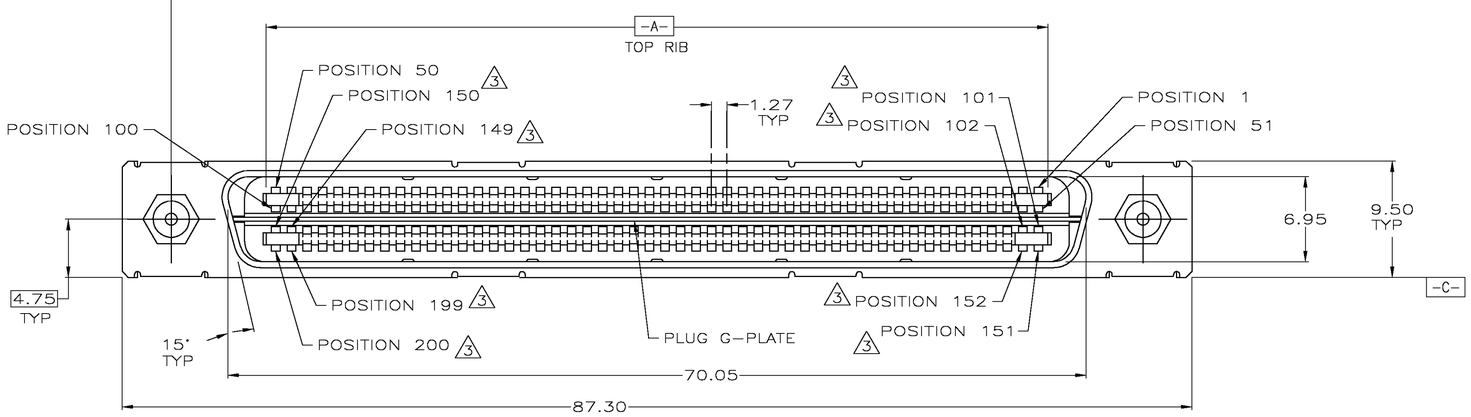

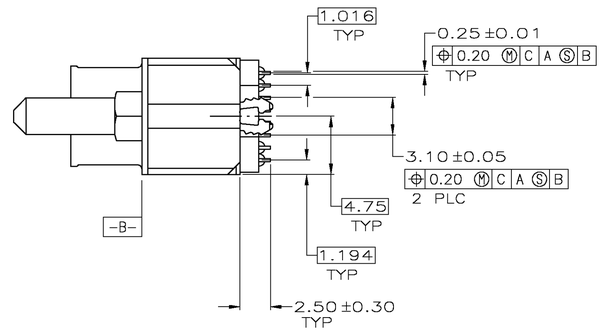

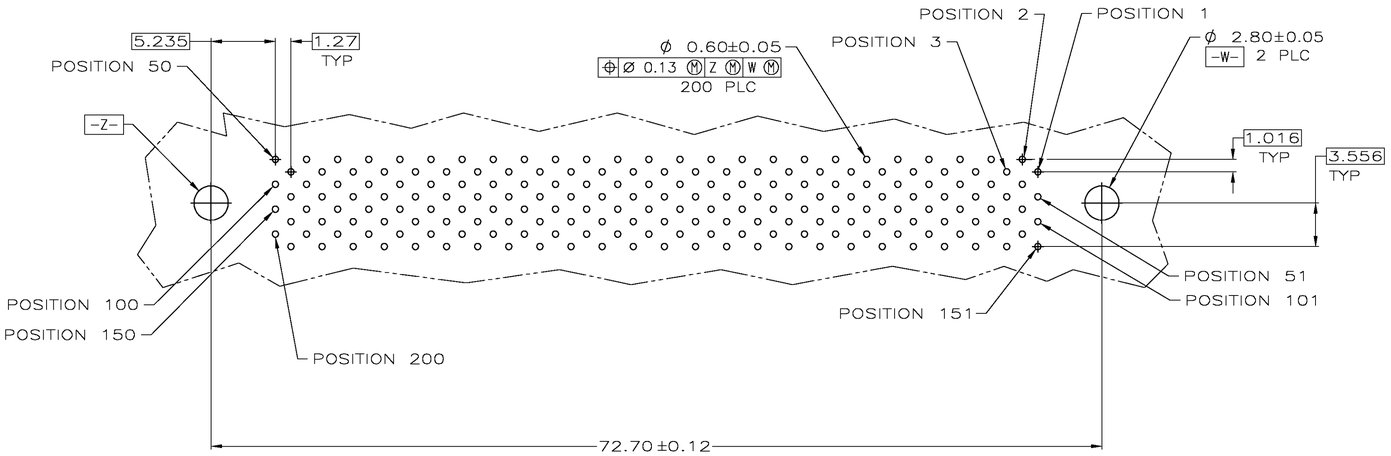

RECOMMENDED PC BOARD MOUNTING DIMENSIONS
COMPONENT SIDE

1. HOUSING AND TINE PLATE: POLYESTER, NATURAL.
   CONTACT: COPPER ALLOY.
   SHELL: CARBON STEEL.
   RETENTION LEG AND GUIDE PIN: BRASS.
   PLUG G-PLATE: STAINLESS STEEL.
2. SHELL: 3.00μm MIN NICKEL OVER 1.30μm MIN COPPER.
   RETENTION LEG: 2.00μm MIN TIN OVER 1.00μm MIN NICKEL.
   GUIDE PIN: NICKEL OVER COPPER.
   CONTACTS: 0.76μm MIN GOLD FOR A LENGTH OF 3.00 MIN FROM MATING END,
   2.54μm MIN TIN FOR A LENGTH OF 2.80 MIN FROM OPPOSITE END,
   BOTH OVER 1.27μm MIN NICKEL.
3. CONTACTS 101,102,149,150,151,152,199, AND 200, ARE SEQUENCED TOWARDS MATING FACE.
4. DATE CODE MAY BE MARKED ON THIS SIDE, IN ONE OF THE LOCATIONS SHOWN.

COPYRIGHT 2005
TYCO ELECTRONICS CORP
ALL RIGHTS RESERVED

5787887-1
PART NUMBER

THIS DRAWING IS A CONTROLLED DOCUMENT.

DIMENSIONS: mm

TOLERANCES UNLESS OTHERWISE SPECIFIED:
0 PLC ± –
1 PLC ± –
2 PLC ± 0.25
3 PLC ± –
4 PLC ± –
ANGLES ± 2°

MATERIAL 1
FINISH 2

DWN 12-07-04 G. ATTADIA – DOCK5
CHK 12-07-04 C. ROHDE
APVD 12-07-04 M. WALMSLEY
PRODUCT SPEC –
APPLICATION SPEC –
WEIGHT –

Tyco Electronics Corporation
Harrisburg, Pa 17105-3608

NAME: PLUG ASSEMBLY, 200 POSITION, VERTICAL, .050, CHAMP

SIZE	CAGE CODE	DRAWING NO	RESTRICTED TO
A1	00779	C-5787887	–

CUSTOMER DRAWING | SCALE 4:1 | SHEET 1 OF 1 | REV O