DRAWING MADE IN AMERICAN PROJECTION

WAS P-79-6102

1. PARTS COMPLY WITH AMP SOLDERABILITY SPEC. 109-11-3

2. CONTACT IS PLATED OVERALL WITH .000050 NICKEL, THEN .000030 GOLD OVER CONTACT LENGTH INDICATED AND MATTE TIN ON SOLDER TAIL END.

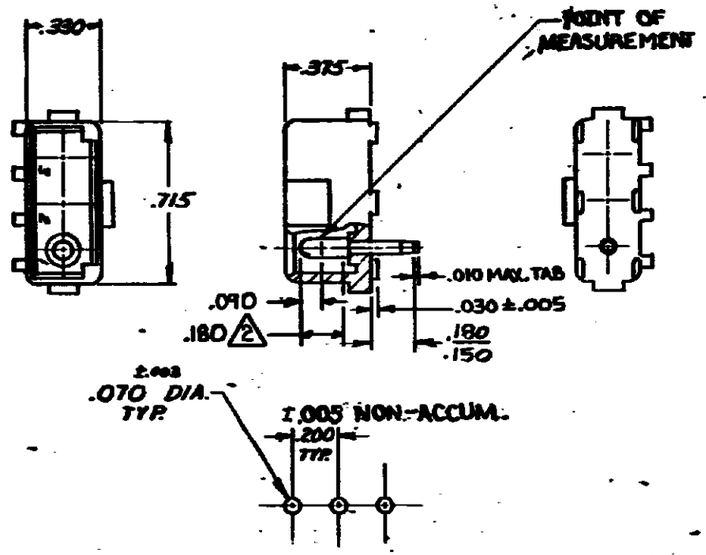

RECOMMENDED LAYOUT FOR .062 THICK P.C. BOARD

ASSEMBLY NO	HSG. MATL & COLOR	PIN MATL & FINISH
5-350541-2	NYLON - GREEN	COPPER ALLOY - GOLD 2
350541-2	NYLON - NATURAL	COPPER ALLOY GOLD 2
350541-1	NYLON - NATURAL	COPPER ALLOY - PRE-TIN

LTR	REVISION RECORD	DR	CHK	DATE
M	RESTORED	[illegible]	RS	[illegible]
K	REV. PER M-7375	[illegible]	[illegible]	7-77
J	[illegible] WAS [illegible] REF. M-7285	[illegible]	DH	[illegible]
H	ADDED NOTE 2 M-6694	[illegible]	DH	[illegible]
G	[illegible] CHAN FOR. M-5734	[illegible]	DH	[illegible]
F	[illegible] Tail Length M-5334	[illegible]	DH	[illegible]
E	REVISED M-3932	[illegible]	DH	[illegible]
D	ECN M-3877	[illegible]	DH	9-76
C	RELEASED	DW	DH	7-76
B	ECN M-3452	GY	RF	[illegible]
A	E.C.N. M-3152	EC	[illegible]	[illegible]

OBSOLETE 1-1,2-1, 3-1,4-1,5-1,6-1,7-1, 8-1,9-1,1-2,2-2,3-2, 4-2,6-2,7-2,8-2,9-2 4-21-86 XW/RS

REQUIRED PER ASSEMBLY

DESCRIPTION

NUMBER 350541

© 1973 BY AMP INCORPORATED. ALL RIGHTS RESERVED. AMP PRODUCTS COVERED BY PATENTS AND/OR PATENTS PENDING.

CUSTOMER COPY REFERENCE ONLY

DR 3-20-73 G. Eckman

CHK 4/6/73 [illegible]

DE [illegible] 4-10-73

APP [illegible] 4-10-73

MATERIAL AND FINISH: SEE TABLE

WIRE RANGE — INSULATION

TOLERANCE EXCEPT AS NOTED ±.015 ±1° 0'

SCALE —

AMP INCORPORATED HARRISBURG, PENNA

CLASS .084 DIA. PIN

TYPE POSITIVE LOCK

FAC CM | B | NO 350541 | ST L

NAME 3 CIRCUIT MATE-N-LOK P.C. BOARD HEADER

DIMENSIONS IN INCHES, DO NOT SCALE PRINT.

AMP 1253 REV 11/68